NSG 4070
TEST SYSTEM FOR CONDUCTED AND RADIATED IMMUNITY

NSG 4070

The NSG 4070, successor of the NSG 2070, is a multifunctional EMC immunity test system. Its large frequency range from 9 kHz to 1 GHz and its modular set-up using internal or external amplifiers enable a large variety of applications including tests according to IEC 61000-4-6, various BCI applications as well as signal generator and power meter for test systems as per IEC 61000-4-3, IEC 61000-4-20, IEC 61000-4-21 and many other applications. The powerful and easy to use firmware makes the NSG 4070 independent from an external PC and control software, however it can also be remote controlled for system operation. A state-of-the-art data transfer of test and measurement data for documentation is provided by USB stick to be plugged into the front panel.

- **Integrated signal generator 9 kHz to 1 GHz**
- **3 power meter inputs 9 kHz to 1 GHz**
- **Integrated power amplifier module for different applications**
- **Multiple EUT monitoring options**
- **5,7" TFT color display**
- **Internal, menu-based control software**
- **Basic remote control software and report generator included**

- External access to signal generator output and power amplifier input and output
- 3 power meter inputs
- 5.7" color display, easy to use firmware
- Hard keys for important functions

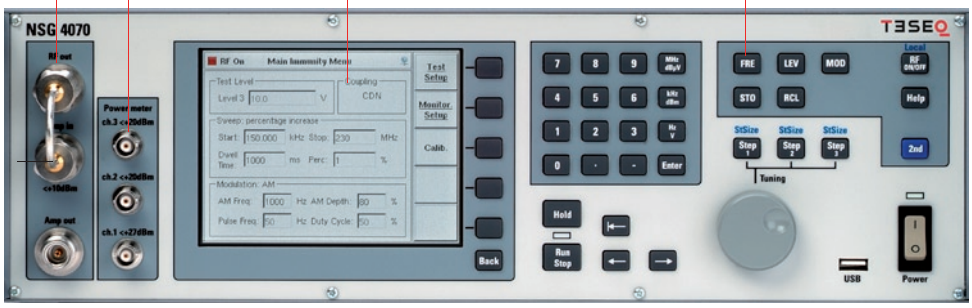

- User port for 4 TTL inputs and 4 TTL outputs and supply voltages for individual monitoring and control applications
- Analog, digital and optical monitoring inputs for extensive EUT monitoring options
- 10 MHz reference for synchronisation, Trigger input for external control of measurement routines
- Remote control via RS232, LAN or USB

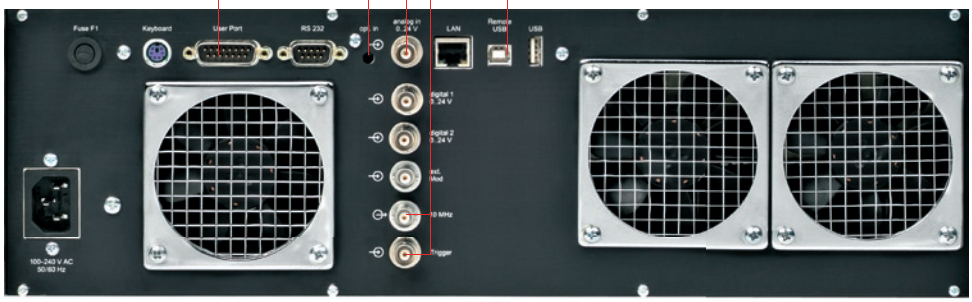

TESEQ

Advanced Test Solutions for EMC

82-253290 E01 March 2008

NSG 4070
TEST SYSTEM FOR CONDUCTED AND RADIATED IMMUNITY

Technical specifications

Generator

RF	
Frequency range:	9 kHz – 1 GHz
Resolution:	1 Hz
Reference frequency:	10 MHz Reference output
RF Level	
Level range:	-60 dBm to +10 dBm
Resolution:	0.1 dB
Settling time:	10 ms
Amplitude modulation	
Modulation depth:	0 – 100%
Modulation frequency range:	1 Hz – 50 kHz
Frequency resolution:	1 Hz
Pulse modulation	
Rise / fall time (10% / 90%):	< 1 µs
Modulation frequency range:	1 Hz – 50 kHz
Frequency resolution:	1 Hz
Duty cycle:	10% to 90%
External modulation	
Delay time:	< 1 µs / 180°
Period:	min. 20 µs
Pulse width:	min. 10 µs

Power meter

Frequency range:	9 kHz – 1 GHz
Linear measurement range	
channel 1:	-15 dBm to +27 dBm
channel 2,3:	-25 dBm to +20 dBm
Max. input/no damage	
channel 1-3:	+28 dBm
Noise level:	>6 dB below the measurement range
Input return loss:	>20 dB (below 500 MHz), >17 dB (500 MHz to 1 GHz)
Connector:	BNC socket, 50 Ω

NSG 4070
TEST SYSTEM FOR CONDUCTED AND RADIATED IMMUNITY

Power meter (continued)

Accuracy	
channel 1:	typ. <0.4 dB
channel 2,3	
below 10 MHz:	range -25 to 17 dBm typ. <0.3 dB range 17 to 20 dBm typ. <1.5 dB
above 10 MHz:	typ. <0.4 dB

Power amplifier

Nominal output power:	**20 W**	**30 W**	**75 W**
Frequency range:	150 kHz – 230 MHz	150 kHz – 230 MHz	150 kHz – 230 MHz
Input impedance:	50 Ω	50 Ω	50 Ω
Output impedance:	50 Ω	50 Ω	50 Ω
Input return loss:	min. 10 dB	min. 10 dB	min. 10 dB
Output return loss:	nominal min. 9.5 dB, 0 dB without damage	nominal min. 9.5 dB, 0 dB without damage	nominal min. 9.5 dB, 0 dB without damage
Gain:	min. 46 dB	min. 46 dB	min. 50 dB
Gain flatness:	max. +/- 3 dB	max. +/- 3 dB	max. +/- 3 dB
Saturated output power:	min. 43 dBm	min. 45 dBm	min. 48.75 dBm
Max. input power linear without damage:	< -3.5 dBm max. +10 dBm	< -1.5 dBm max. +10 dBm	< -3 dBm max. +10 dBm
2nd harmonic distortion at nominal output power:	typ. < -30 dBc	typ. < -30 dBc	typ. < -35 dBc
3rd harmonic distortion at nominal output power:	typ. < -20 dBc	typ. < -20 dBc	typ. < -18 dBc

TESEQ
Advanced Test Solutions for EMC

NSG 4070
TEST SYSTEM FOR CONDUCTED AND RADIATED IMMUNITY

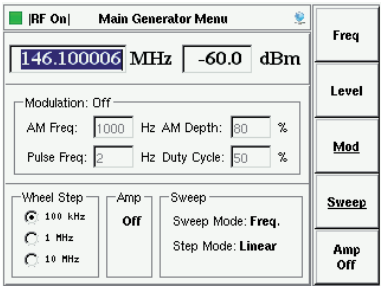

Firmware: Main generator menu

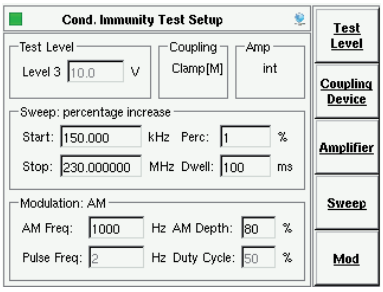

Firmware: Immunity test setup

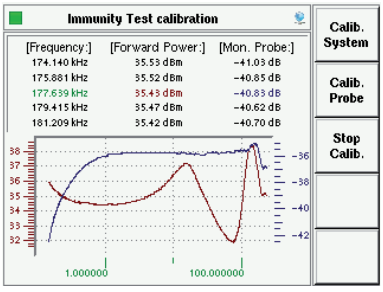

Firmware: Calibration result

Test and measurement routines
Firmware: Generator mode

Sweep:	frequency sweep, level sweep
Modulation:	AM, AM PC (peak conservation), pulse modulation and external
Others:	free parameter setting from 9 kHz to 1 GHz, high power mode using power amplifier

Firmware: Immunity mode

Level:	constant or slope test levels, max test levels depending on power amplifier, test routine for IEC 61000-4-6 level 1 to 3 and X up to 30 V EMF, for BCI tests levels in mA or dBµA
Test methods IEC 61000-4-6:	CDN, EM clamp, current clamp and direct injection, clamp injection with test level control using monitoring probe
Test methods BCI:	substitution method with optional use of the monitoring probe, closed loop method with power limitation (factor adjustable)
Sweep:	frequency sweep, sweep function linear, steps per decade, percental and as requested in ISO 11452
Modulation:	AM, AM PC (peak conservation), pulse modulation, external or mixed (e.g. 1 kHz AM internal modulated with 1 Hz PM external)
EUT monitoring:	Individual configuration of the ports, function to check or prepare the EUT monitoring, display of EUT monitoring results during the test, in the result file and in the test report
Calibration:	Test set-up and monitoring probe calibration, display, store and recall function of calibration files (limitation of file numbers only by the disk space, typical >340 files)
EUT threshold search:	test interrupt for manual or automatic change of frequency or stress level
Store and recall:	store and recall function of test configurations, calibration results and test results (number of files is only limited by the disk space, typical >340 files), supports USB sticks
Component check:	quick check of system components, e.g. cable, attenuator max. 52 dB/ 54 dB/ 58 dB attenuation for 20 W/ 30 W/ 75 W amplifier, max. +16 dB gain at 27 dBm output level
Additional features:	free parameter setting from 9 kHz to 1 GHz, supports external power amplifier, directional coupler and attenuator

NSG 4070
TEST SYSTEM FOR CONDUCTED AND RADIATED IMMUNITY

Software: Generator menu

Windows software

General:	The windows software includes the firmware functionality. The following **additional** features are available see below. The software allows the use of the report generator and all post processing features without the remote connection to the NSG 4070.
Remote control:	remote control of NSG 4070 via LAN, USB or RS232
Data transfer:	transfer between NSG 4070 and PC via LAN connection or with USB stick

Software: Immunity test setup

Windows software: Generator mode

Display:	power meter display (units dBm, V, dBµV) with reference value setting, min./max. display and export to a log file (frequency, time, power), EUT monitoring display
Single step mode:	synchronized frequency sweep with power measurement, output as graph and log. file (application: scalar analysis on quadripole networks)

Software: EUT monitoring setup

Windows software: Immunity mode

Sweep:	test level can be different from calibration value, level sweep with start and stop value or with free editable table, level profile editor and sweep function for BCI tests
EUT threshold search:	different opportunities for manual and automatic control
EUT monitoring:	power meter use as EUT monitoring device, keyboard activity for test interrupt with possibility for writing test report commands (EUT reaction etc.), output control for user port
Additional features:	for each frequency step or each monitoring event output control for user port (to control a RF switch for the use of two amplifier)
One click report generation:	tool for test report generation in rtf format, works with different user changeable templates, post processing of measurement data (input for test conditions, EUT parameters and comments), free changeable structure and items of the report, user support of repetitive inputs
Export function:	result and calibration files can be converted to txt files, graphs can be zoomed and converted to jpg files

TESEQ
Advanced Test Solutions for EMC

NSG 4070
TEST SYSTEM FOR CONDUCTED AND RADIATED IMMUNITY

NSG 4070 front panel with RF ports

Analog ports

Front panel	
Generator output:	N socket 50 Ω, 9 kHz – 1 GHz
Power amplifier input:	N socket 50 Ω, max. +10 dBm
Power amplifier output:	N socket 50 Ω
Power meter channel 1 to 3:	as defined in chapter “Power meter“
Back panel	
Monitoring input analog:	BNC socket, 0-24 V Ri=15 kΩ, 6 mV resolution
External modulation input:	BNC socket, impedance >10 kΩ, level: 1 Vpp to get 100% AM, 1 Hz – 50 kHz
10 MHz reference output:	BNC socket, approx. 1 Vpp / 50 Ω

Digital ports

Front panel	
USB	USB host connector for USB stick, keyboard, mouse
Back panel	
User port:	D-Sub 15 pole 4 TTL inputs 4 TTL outputs +12 V / 200 mA, -12 V / 200 mA, +5 V / 200 mA power supply
Monitoring digital input 1:	BNC socket 0-24 V via optical coupler Ri=1.5 kΩ, switching threshold approx. 2-3 V
Monitoring digital input 2:	BNC socket 0-24V via optical coupler, Ri=1.5 kΩ, switching threshold approx. 2-3 V
Monitoring optical input:	LWL (Light wave connector), HP versatile link HFBR0501 series 40 kBd, (avoid scattered light on the back panel)
Trigger input:	BNC socket, TTL for external triggering, max. frequency 100 Hz, trigger delay <10 ms
RS232:	D-Sub 9 pole, up to 115200 Bd
PS2 keyboard:	PS2
USB	USB host connector for USB stick, keyboard, mouse
USB device connector:	for remote control
Network:	RJ45

NSG 4070
TEST SYSTEM FOR CONDUCTED AND RADIATED IMMUNITY

Power supply

Power supply unit	110 / 230 VAC 50 / 60 Hz autoranging	recommended fuse F1 for 110 V	recommended fuse F1 for 230 V
Power consumption without power amplifier:	approx. 80 W	1 A (slow)	0.5 A (slow)
20 W module:	approx. 215 W	4 A (slow)	1.6 A (slow)
30 W module	approx. 240 W	4 A (slow)	1.6 A (slow)
75 W module	approx. 415 W	6.3 A (slow)	2.5 A (slow)

General data

Operating temperature range:	0°C – 40°C
Storage temperature range:	-20°C – 60°C
Relative humidity:	95% / 30°C (no moisture condensation)
EMC:	DIN/EN 61326-1:2006
Shock:	DIN/EN 60068-2-27
Vibration:	DIN/EN 60068-2-6
Protection class:	DIN/EN61010-1/IEC61010-1

Mechanical specifications

Size (W x H x D) :	45 cm (19") x 15 cm (3HU) x 42.3 cm (with handle bar and foot)
Weight:	approx. 15 kg (with internal power amplifier), approx. 8 kg (without internal power amplifier)
Size of cardboard box:	80 cm x 61 cm x 34 cm (also for options ATN 60xx and/or LE 4070 additional space available)
Weight of cardboard box:	approx. 8 kg (empty)

TESEQ
Advanced Test Solutions for EMC

NSG 4070
TEST SYSTEM FOR CONDUCTED AND RADIATED IMMUNITY

Application for IEC/EN 61000-4-6, calibration set-up with CDN

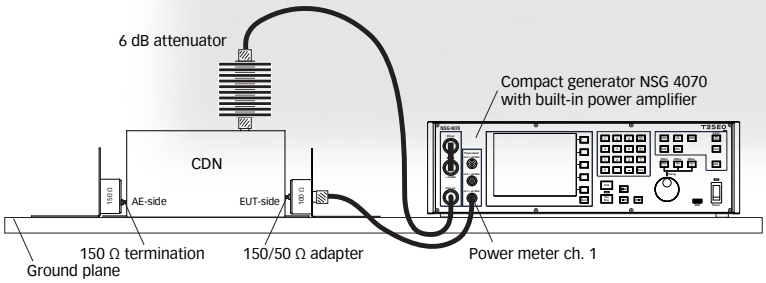

Application for IEC/EN 61000-4-6, EUT set-up with CDN

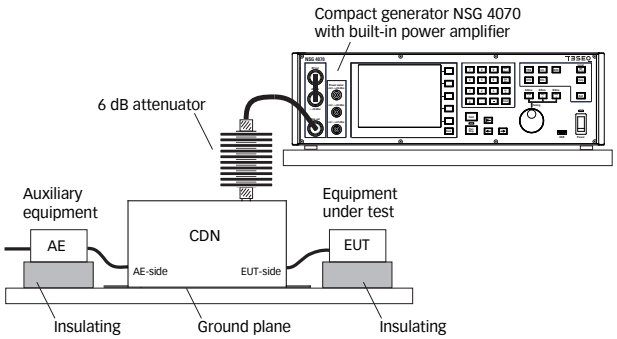

Application for IEC/EN 61000-4-6, calibration set-up with EM clamp

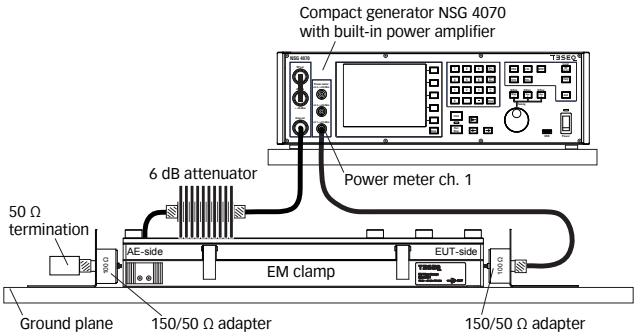

NSG 4070
TEST SYSTEM FOR CONDUCTED AND RADIATED IMMUNITY

Application for IEC/EN 61000-4-6, calibration set-up with current injection probe

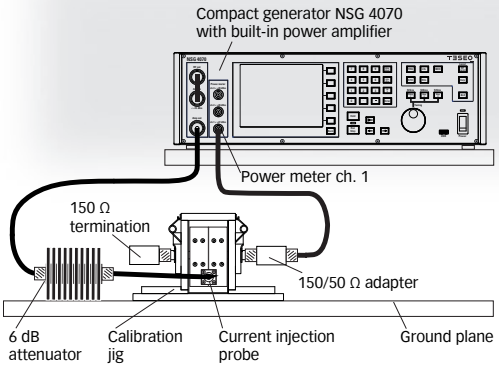

Application for IEC/EN 61000-4-6, EUT set-up with EM clamp or current injection probe and for example with use of a monitoring probe

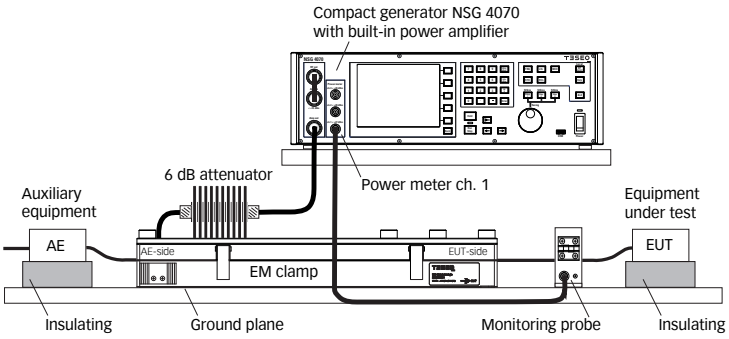

Power recommendation, achievable test levels with 6 dB attenuator, 0.5 dB cable loss, max. insertion loss of the coupling device and AM with 80% modulation depth

Amplifier module:	**20 W**	**30 W**	**75 W**
CDN:	15 V EMF	18 V EMF	30 V EMF
EM clamp (KEMZ 801):	8 V EMF	11 V EMF	17 V EMF
Current injection clamp (CIP 9136):	5 V EMF	6 V EMF	10 V EMF (typ.)

TESEQ

Advanced Test Solutions for EMC

NSG 4070
TEST SYSTEM FOR CONDUCTED AND RADIATED IMMUNITY

NSG 4070 automotive BCI solution

Application for automotive BCI, calibration set-up (power requirements and frequency range demand external power amplifier and directional coupler)

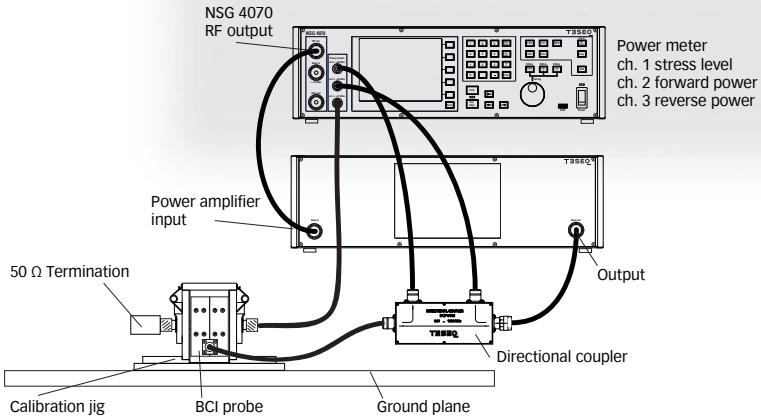

Application for automotive BCI, EUT set-up with monitoring probe

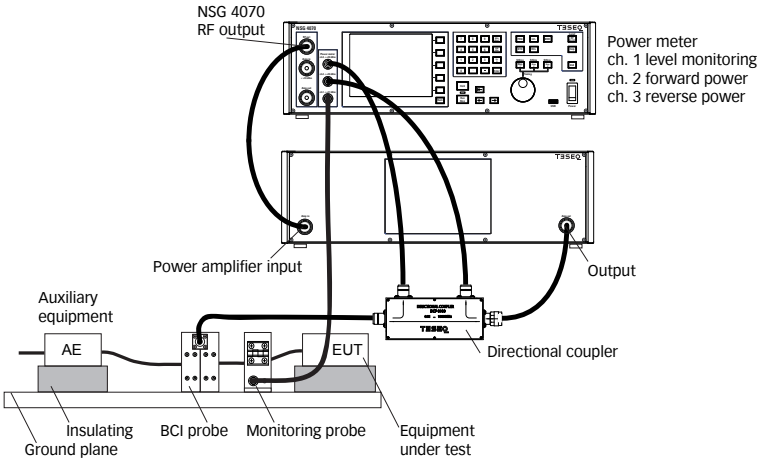

NSG 4070
TEST SYSTEM FOR CONDUCTED AND RADIATED IMMUNITY

Application for IEC/EN 61000-4-3 up to 1 GHz (power requirements and frequency range demand external power amplifier and directional coupler, field probe control required optional software)

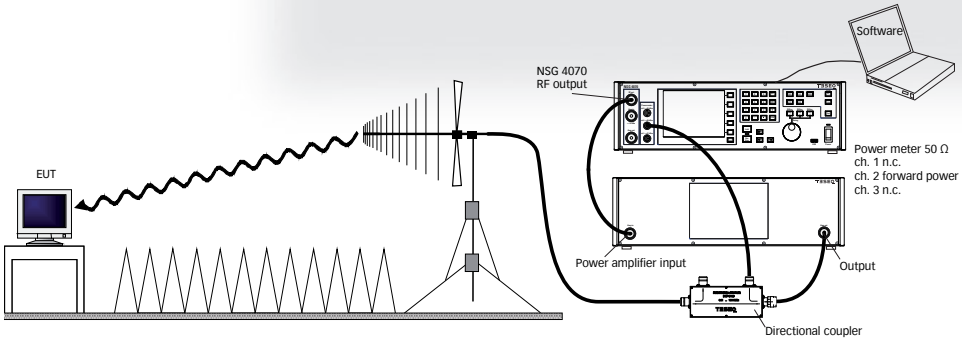

Application for IEC/EN 61000-4-20 up to 1 GHz (power requirements and frequency range demand external power amplifier and directional coupler, field probe control required optional software)

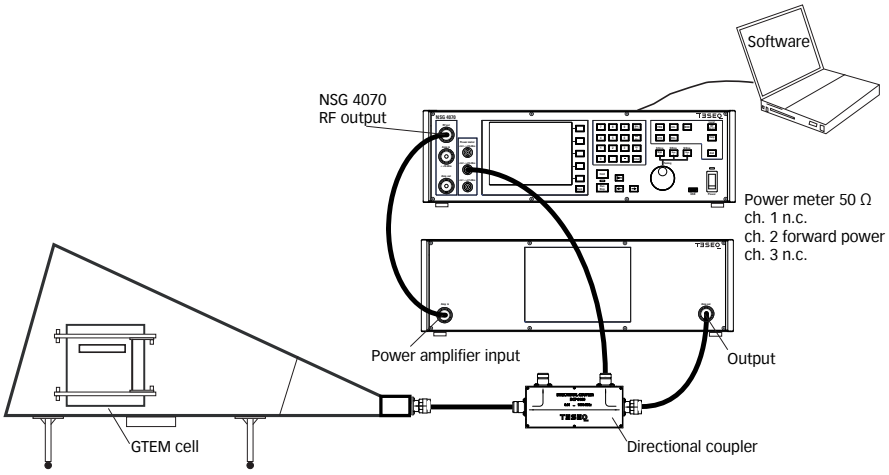

Advanced Test Solutions for EMC

NSG 4070
TEST SYSTEM FOR CONDUCTED AND RADIATED IMMUNITY

NSG 4070 with KEMZ 801 and CAL 801

ATN 6075, 6 dB attenuator, 75 Watts

Delivery items for the NSG 4070 series

Compact immunity test system NSG 4070, 9 kHz - 1 GHz RF generator and power meter (power amplifier as selected); remote control software on USB stick; spare fuses (2); RS232 cable (Nullmodem); mains cable GB, CH, USA/JP, EU; LAN cable, crossover, 3 m; keyboard (English); operating manual

Delivery information

Part number	Description
253293	NSG 4070-0 Compact immunity test system NSG 4070, 9 kHz - 1 GHz RF generator and power meter (without power amplifier)
253292	NSG 4070-20 Compact immunity test system NSG 4070, 9 kHz - 1 GHz RF generator and power meter (with 20 W module 150 kHz - 230 MHz)
253291	NSG 4070-30 Compact immunity test system NSG 4070, 9 kHz - 1 GHz RF generator and power meter (with 30 W module 150 kHz - 230 MHz)
253290	NSG 4070-75 Compact immunity test system NSG 4070, 9 kHz - 1 GHz RF generator and power meter (with 75 W module 150 kHz - 230 MHz)
97-253290	NSG 4070-TC Traceable calibration (ISO17025), order only with the device
253103	NSG 4070 Rack Rack mounting kit for NSG 4070
253104	LE 4070 RF cable set for NSG 4070, consist of: RF cable, N(m)-N(m), 3 m with one right-angle plug, RG223; RF cable, BNC(m)-N(m), 250 mm, RG223; RF cable, N(m)-N(m), 120 mm, RG58; RF cable, N(m)-BNC(m), 2 m, RG223; adapter N(m)-N(m); adapter N(f)-BNC(m)
235308	ATN 6025 Attenuator 25 W cw N(f)-N(f)
235309	ATN 6050 Attenuator 50 W cw N(f)-N(f)
235307	ATN 6075 Attenuator 75 W cw N(f)-N(f), incl. cable LE 213
For CDNs, EM clamp, current injection probes, BCI accessories and antennas please use the web page www.teseq.com.	

Teseq GmbH
Landsberger Str. 255 · 12623 Berlin · Germany
T +49 30 56 59 88 35 F +49 30 56 59 88 34
desales@teseq.com **www.teseq.com**